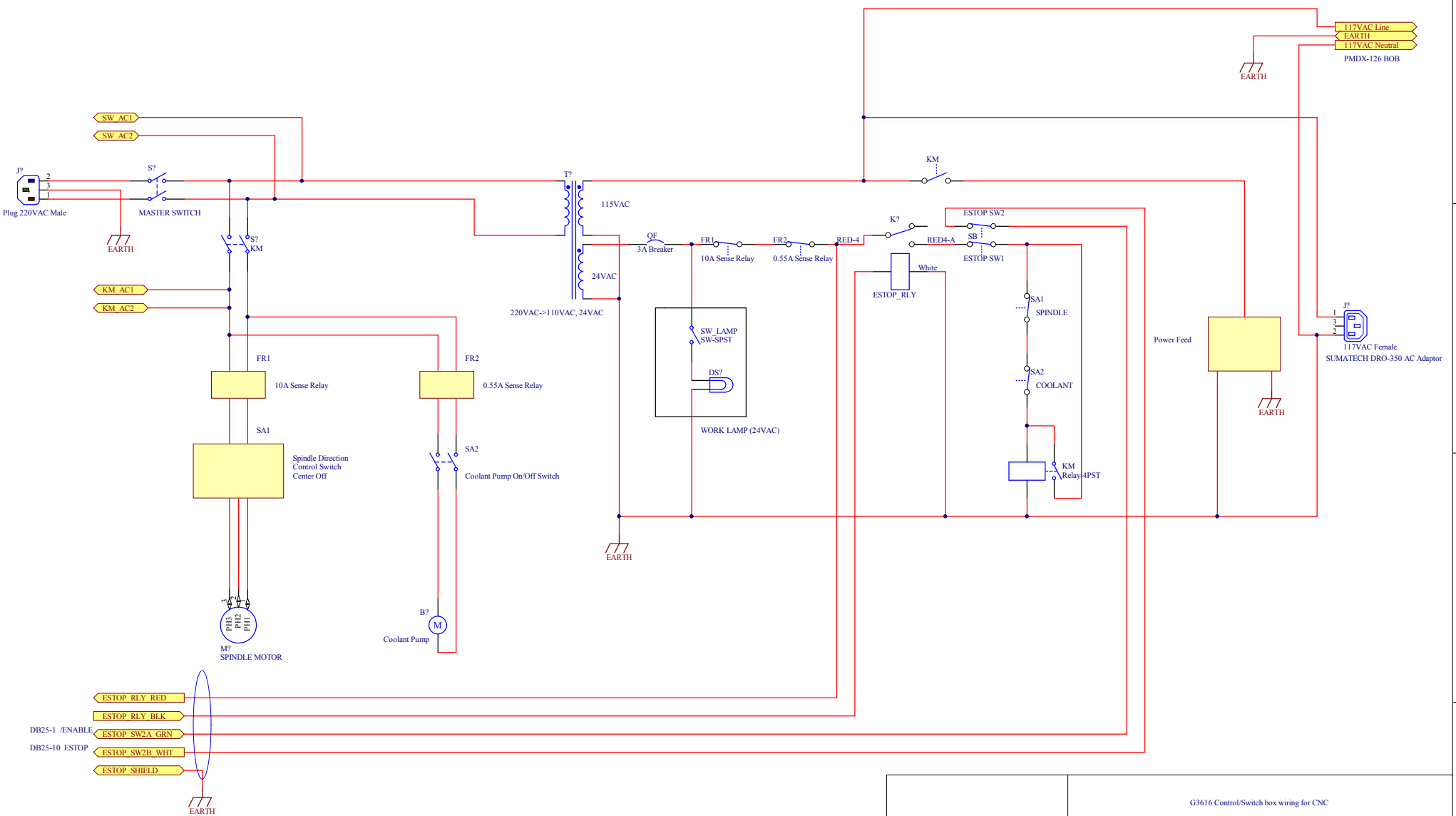

Modifications to Stock G3616 Control and Switch Box
Shumatech 2 conductor AC Adaptor Socket added to 117VAC side before System KM Relay
Second NC ESTOP wired to GRN/WHT pair to go to DB25-10 ESTOP (GRN) and GND (WHT)
Connection to Master Switched 220VAC for Instrumentation power supplies.
Connection to KM Relay switched 220VAC for Servo/Stepper power supplies

G3616 Control/Switch box wiring for CNC

P:\Milling Machine\Drawings\Electrical\G3616_CNC_Wiring.SchDoc

Size	FCSM No.	DWG No.	Rev
Tabloid			1.0
Scale	06/04/2019	Sheet 1 of 1	